LLC *(OOO)* **"ADVERS"**
Russia 443068, Samara City, Street Novo-Sadovaya, 106

Production
LLC "AUTOTERM"
Trikatas str. 4, Riga, LV-1026, Latvia

www.autoterm-europe.com

Sales Department
+371 20110229
E-mail: sales@autoterm-europe.com

Technical Support Department
24/7 - support
+371 25529999
E-mail: service@autoterm-europe.com

Set of Relay

LABEL

ADVR.206.00.00.000 ET

Date of issue _____

1. CERTIFICATE OF ACCEPTANCE

The article has been manufactured in accordance with the effective technical documentation and has been recognised as suitable for use.

Controller of the Section of Technical Control

/Place of seal/ _____ _____
Personal signature Full name

The set of relay is designated for connection of the heating device BINAR-5S to the heater of the saloon of the car. During the operation process of the heating device, when the temperature of liquid reaches the set value (*see the manual of operation for the control panel PU-20*), the relay is activated and switches on the fan of the heater of the car saloon (provided that the switch of the fan of car saloon is switched on).

In order to connect the set of relay to the cord of the heating device, one has to take off the insulation from the ends of wires to be connected, put on the wire the thermo-contractible tube and wind together the wires of the same colour, then solder the wound wires. Install the thermo-contractible tube so that the winding (soldered place) is in the middle of the tube. Heat up the tube and put it on the wires.

Attention! It is prohibited to use a non-soldered connection.

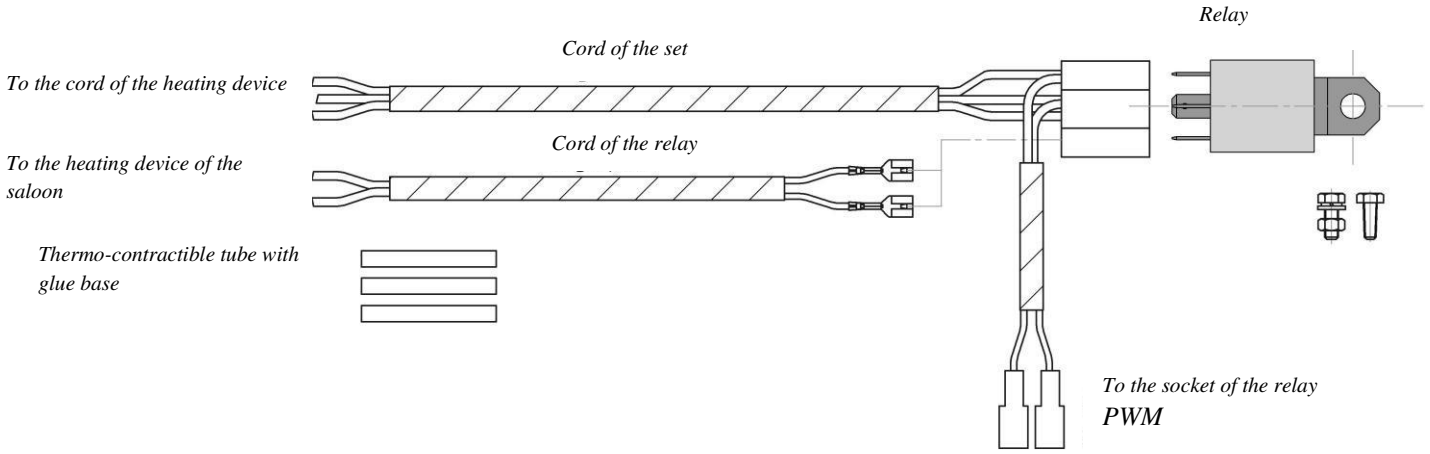

To perform further connection according to the circuit of electrical connections

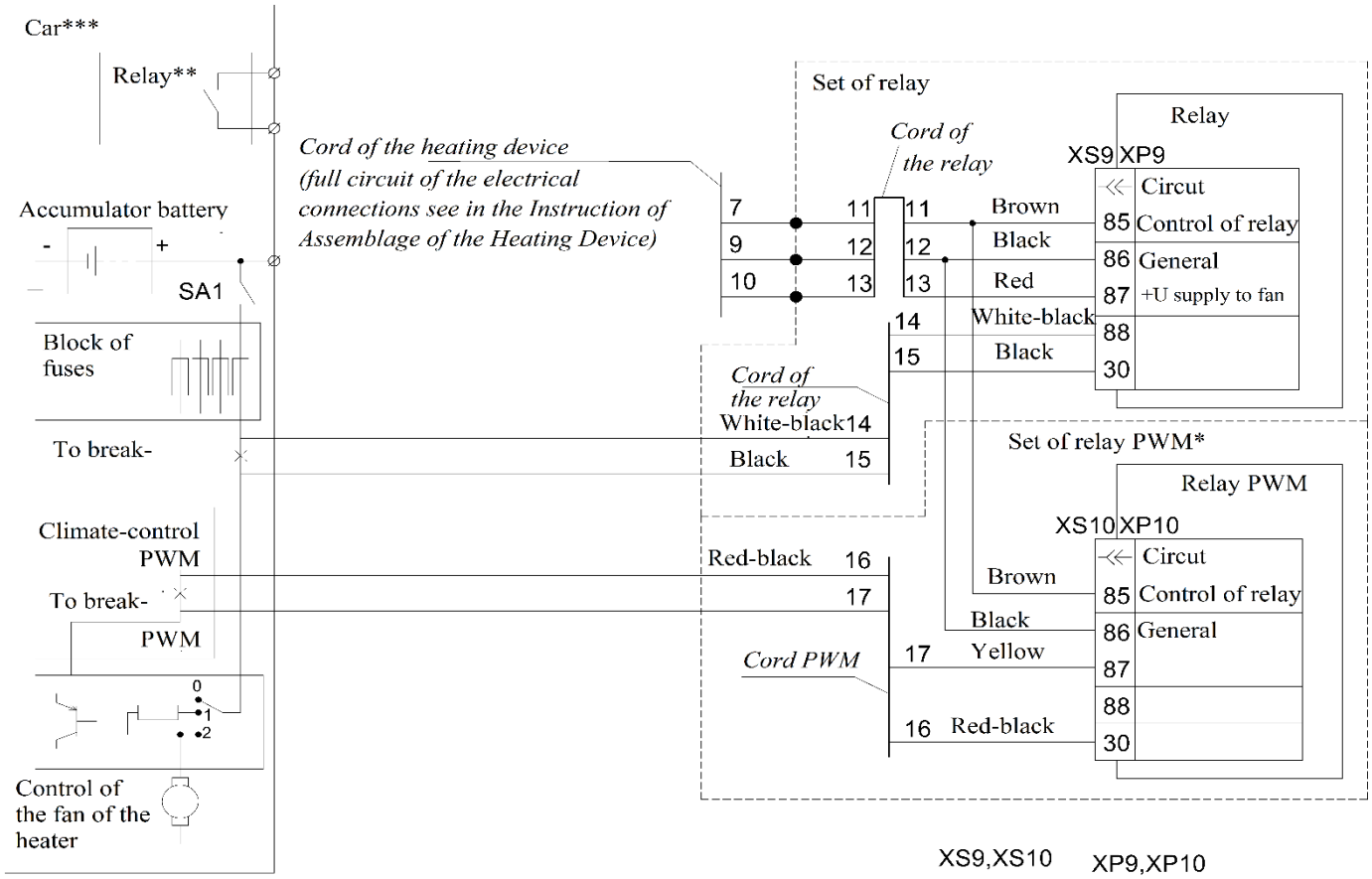
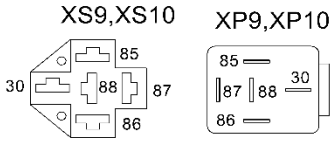
1 * Upon an additional order.
2 ** Relay which is installed by the remote alarm system.
3***Example of connection of the heating device to the car.